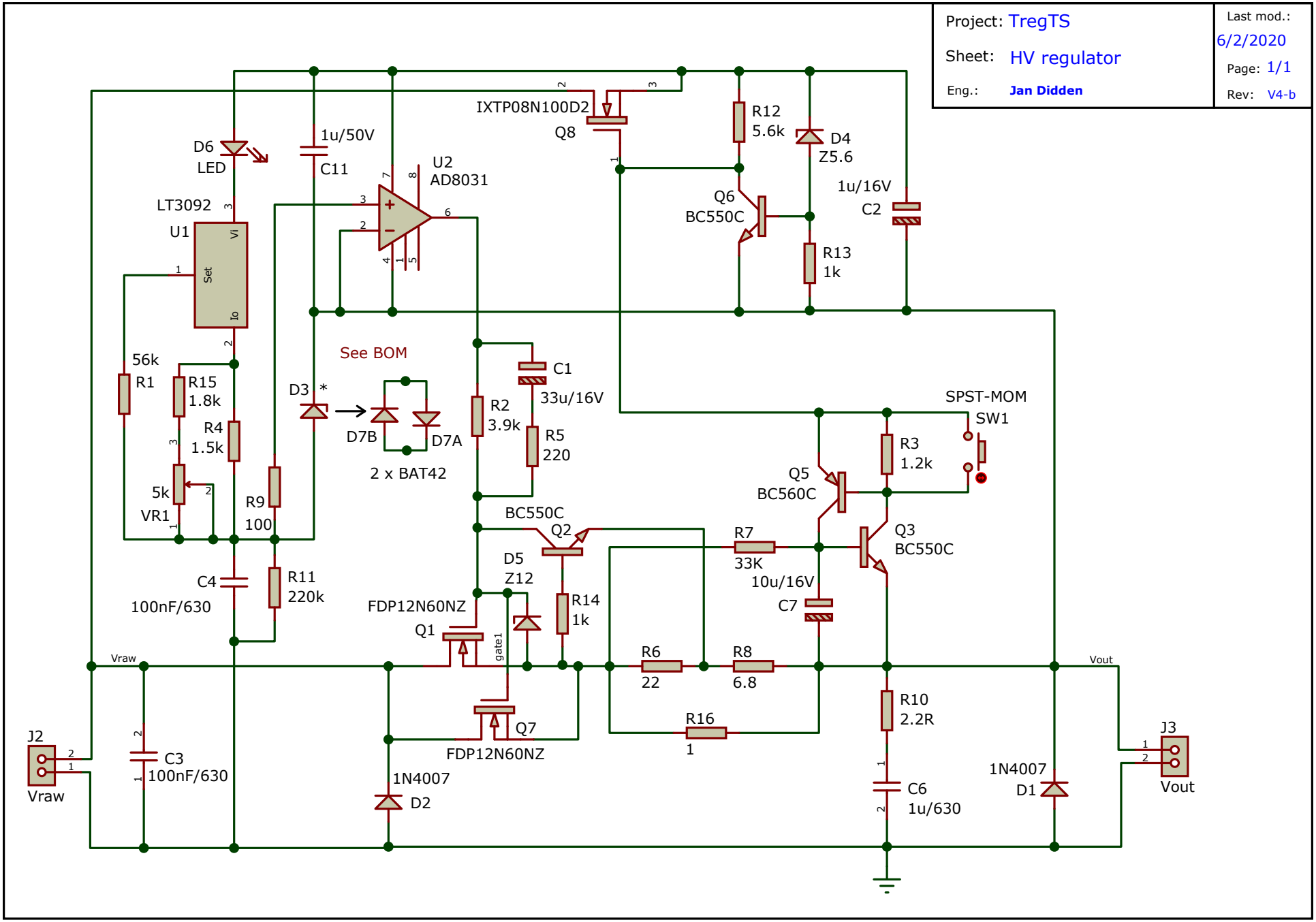
Project: TregTS
Sheet: HV regulator
Eng.: Jan Didden
Last mod.: 6/2/2020
Page: 1/1
Rev: V4-b
IXTP08N100D2
Q8
R12
5.6k
D4
Z5.6
1u/16V
C2
Q6
BC550C
R13
1k
D6
LED
1u/50V
C11
U2
AD8031
LT3092
U1
Vi
Set
Io
56k
R1
R15
1.8k
R4
1.5k
5k
VR1
R9
100
C4
100nF/630
R11
220k
D3 *
See BOM
D7B
D7A
2 x BAT42
C1
33u/16V
R2
3.9k
R5
220
BC550C
Q2
D5
Z12
R14
1k
FDP12N60NZ
Q1
gate1
Q7
FDP12N60NZ
1N4007
D2
SPST-MOM
SW1
R3
1.2k
Q5
BC560C
Q3
BC550C
R7
33K
10u/16V
C7
R6
22
R8
6.8
R16
1
R10
2.2R
C6
1u/630
1N4007
D1
Vraw
Vout
J2
Vraw
C3
100nF/630
J3
Vout