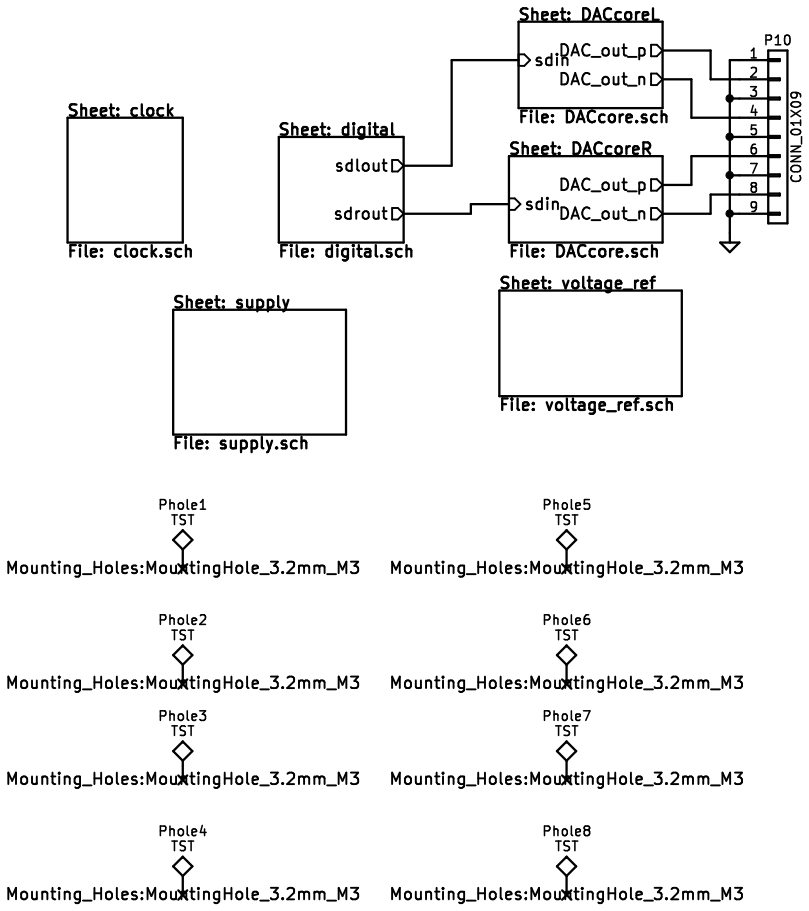
Sheet: DACcoreL
sdin
DAC_out_p
DAC_out_n
File: DACcore.sch
P10
CONN_01X09
Sheet: clock
File: clock.sch
Sheet: digital
sdlout
sdrout
File: digital.sch
Sheet: DACcoreR
sdin
DAC_out_p
DAC_out_n
File: DACcore.sch
Sheet: supply
File: supply.sch
Sheet: voltage_ref
File: voltage_ref.sch
Phole1
TST
Mounting_Holes:MountingHole_3.2mm_M3
Phole2
TST
Mounting_Holes:MountingHole_3.2mm_M3
Phole3
TST
Mounting_Holes:MountingHole_3.2mm_M3
Phole4
TST
Mounting_Holes:MountingHole_3.2mm_M3
Phole5
TST
Mounting_Holes:MountingHole_3.2mm_M3
Phole6
TST
Mounting_Holes:MountingHole_3.2mm_M3
Phole7
TST
Mounting_Holes:MountingHole_3.2mm_M3
Phole8
TST
Mounting_Holes:MountingHole_3.2mm_M3

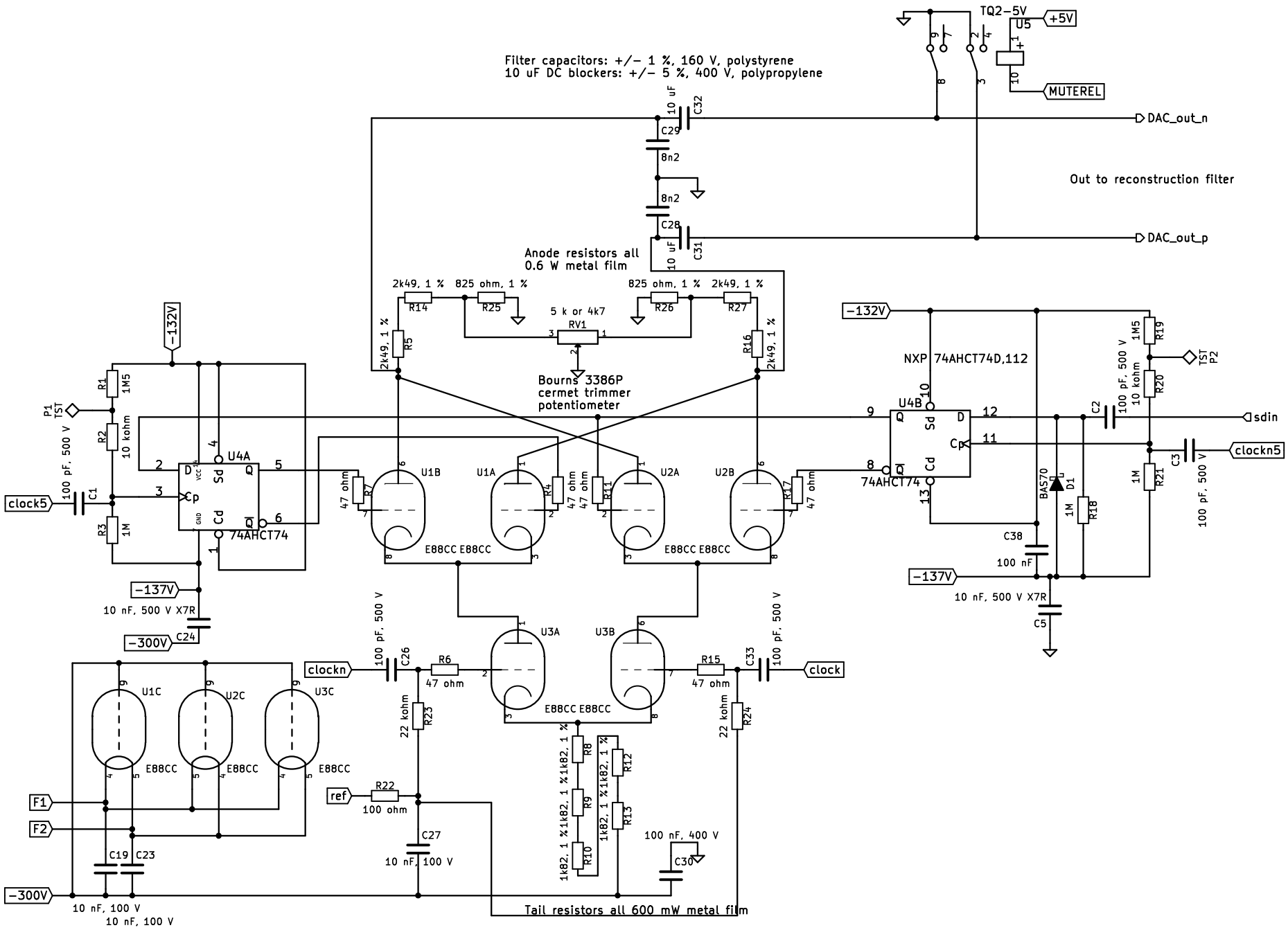
Filter capacitors: +/- 1 %, 160 V, polystyrene
10 uF DC blockers: +/- 5 %, 400 V, polypropylene
TQ2-5V
U5
+5V
MUTEREL
DAC_out_n
DAC_out_p
Out to reconstruction filter
C29
8n2
8n2
C28
10 uF
C32
10 uF
C31
Anode resistors all
0.6 W metal film
2k49, 1 %
825 ohm, 1 %
825 ohm, 1 %
2k49, 1 %
R14
R25
R26
R27
5 k or 4k7
RV1
R5
R16
Bourns 3386P
cermet trimmer
potentiometer
-132V
NXP 74AHCT74D,112
U4B
74AHCT74
sdin
clockn5
TST
P2
R19
1M5
R20
10 kohm
C2
100 pF, 500 V
C3
100 pF, 500 V
R21
1M
R18
1M
D1
BAS70
C38
100 nF
-137V
10 nF, 500 V X7R
C5
P1
TST
R1
1M5
R2
10 kohm
R3
1M
C1
100 pF, 500 V
clock5
U4A
74AHCT74
-137V
10 nF, 500 V X7R
C24
-300V
U1B
U1A
U2A
U2B
47 ohm
R7
R4
R11
R17
E88CC E88CC
E88CC E88CC
U3A
U3B
clockn
C26
100 pF, 500 V
R6
47 ohm
R15
47 ohm
C33
100 pF, 500 V
clock
22 kohm
R23
22 kohm
R24
E88CC E88CC
R8
R9
R10
R12
R13
1k82, 1 %
1k82, 1 %
1k82, 1 %
1k82, 1 %
ref
R22
100 ohm
C27
10 nF, 100 V
100 nF, 400 V
C30
Tail resistors all 600 mW metal film
U1C
U2C
U3C
E88CC
E88CC
E88CC
F1
F2
C19
C23
-300V
10 nF, 100 V
10 nF, 100 V

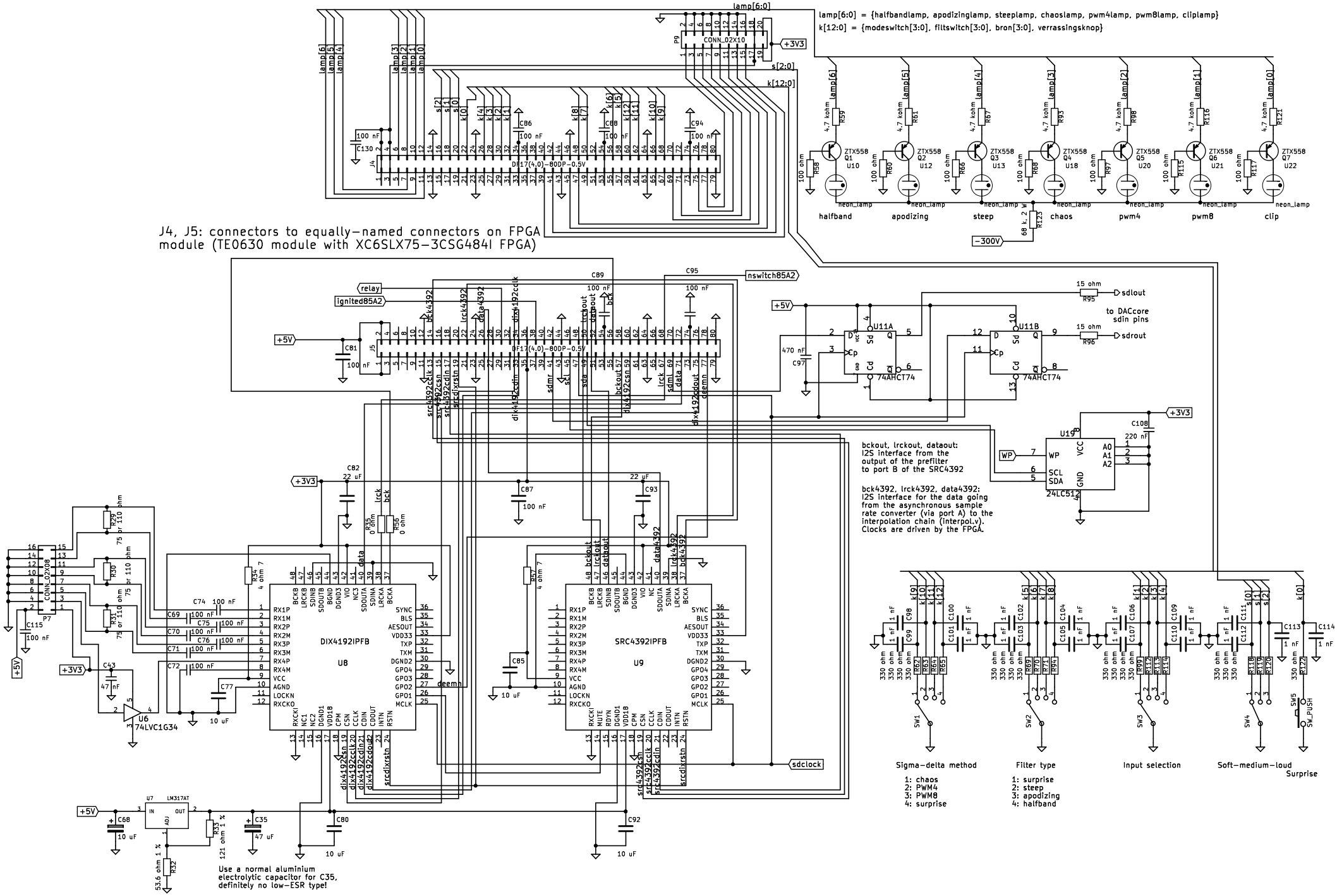
lamp[6:0] = {halfbandlamp, apodizinglamp, steeplamp, chaoslamp, pwm4lamp, pwm8lamp, cliplamp}
k[12:0] = {modeswitch[3:0], filtswitch[3:0], bron[3:0], verrassingsknop}
J4, J5: connectors to equally-named connectors on FPGA module (TE0630 module with XC6SLX75-3CSG484I FPGA)
halfband
apodizing
steep
chaos
pwm4
pwm8
clip
to DACcore sdin pins
bckout, lrckout, dataout: I2S interface from the output of the prefilter to port B of the SRC4392
bck4392, lrck4392, data4392: I2S interface for the data going from the asynchronous sample rate converter (via port A) to the interpolation chain (interpol.v). Clocks are driven by the FPGA.
Use a normal aluminium electrolytic capacitor for C35, definitely no low-ESR type!
Sigma-delta method
1: chaos
2: PWM4
3: PWM8
4: surprise
Filter type
1: surprise
2: steep
3: apodizing
4: halfband
Input selection
Soft-medium-loud
Surprise

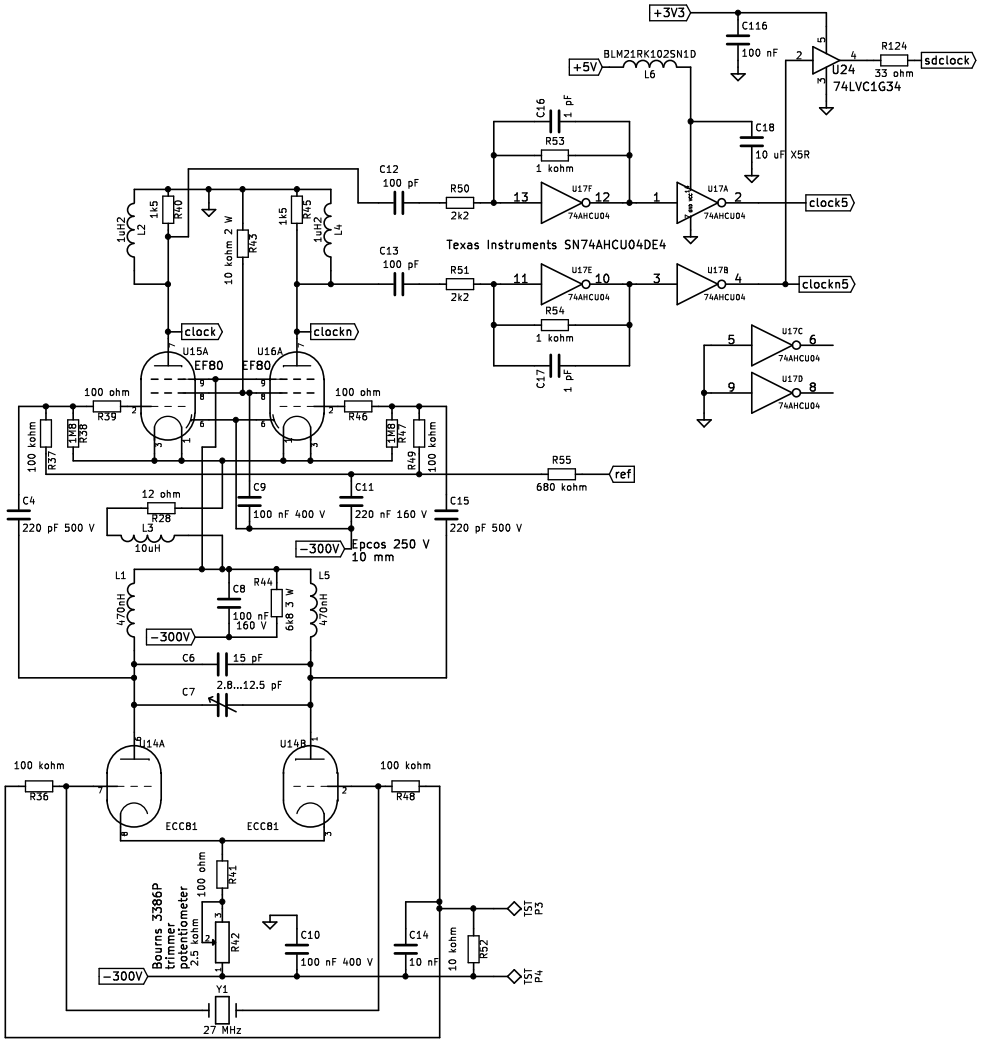

Euroquartz HC49/4H/30/50/40/18PF/ATF
27 MHz fundamental-mode crystal in HC49-4H package,
R max. 40 ohm, C0 typ. 2.3 pF

Pin 0 is the centre metal of the valve holder, if any.

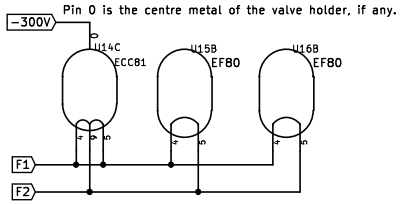

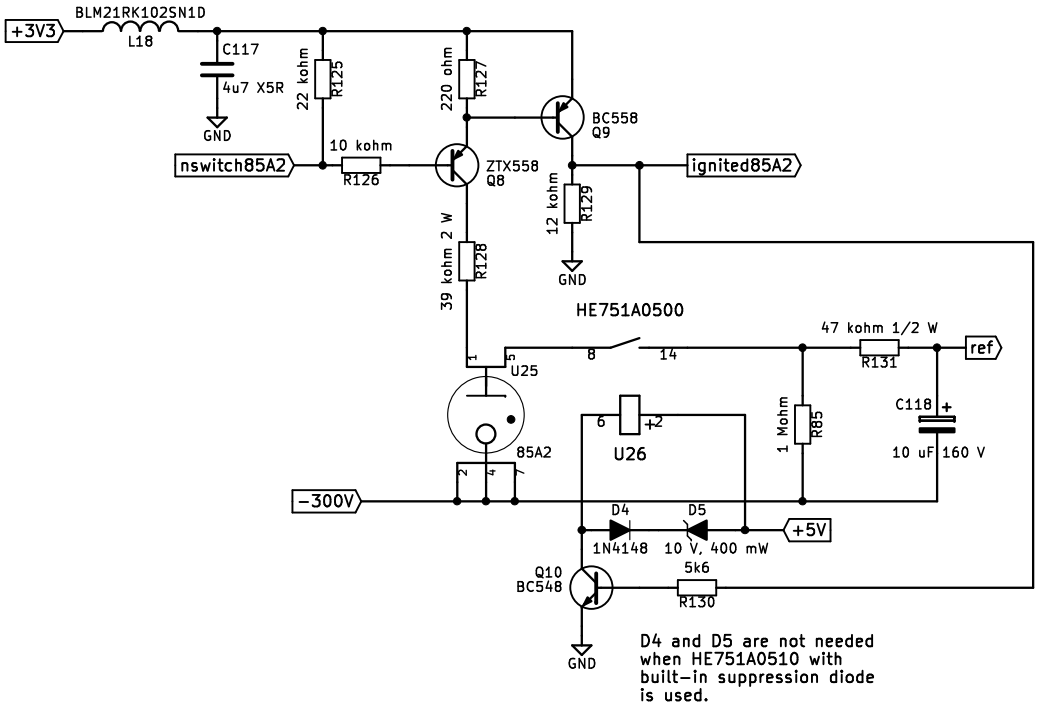
+3V3
BLM21RK102SN1D
L18
C117
4u7 X5R
GND
22 kohm
R125
220 ohm
R127
BC558
Q9
nswitch85A2
10 kohm
R126
ZTX558
Q8
ignited85A2
12 kohm
R129
GND
39 kohm 2 W
R128
HE751A0500
47 kohm 1/2 W
R131
ref
U25
8
14
C118
10 uF 160 V
1 Mohm
R85
U26
85A2
-300V
D4
1N4148
D5
10 V, 400 mW
+5V
Q10
BC548
5k6
R130
GND
D4 and D5 are not needed
when HE751A0510 with
built-in suppression diode
is used.

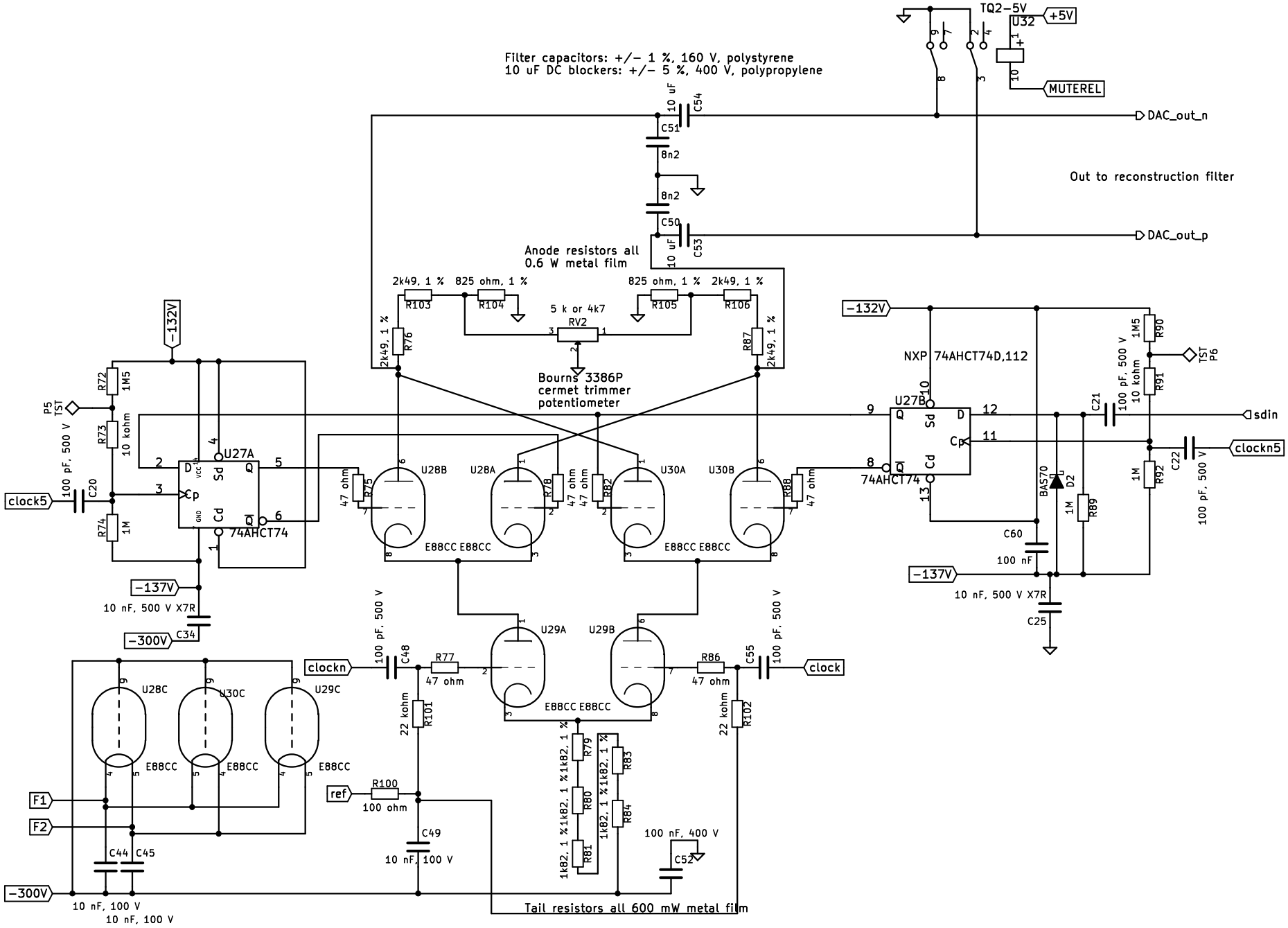
Filter capacitors: +/- 1 %, 160 V, polystyrene
10 uF DC blockers: +/- 5 %, 400 V, polypropylene
TQ2-5V
U32
+5V
MUTEREL
DAC_out_n
DAC_out_p
Out to reconstruction filter
C51
8n2
8n2
C50
10 uF
C54
C53
Anode resistors all
0.6 W metal film
2k49, 1 %
825 ohm, 1 %
R103
R104
R105
R106
5 k or 4k7
RV2
R76
R87
Bourns 3386P
cermet trimmer
potentiometer
-132V
R72
1M5
R73
10 kohm
P5
TST
100 pF, 500 V
C20
clock5
R74
1M
U27A
74AHCT74
-137V
10 nF, 500 V X7R
C34
-300V
U28B
U28A
U30A
U30B
R75
R78
R82
R88
47 ohm
E88CC
U29A
U29B
clockn
C48
R77
R86
C55
clock
R101
R102
22 kohm
R79
R80
R81
R83
R84
1k82, 1 %
R100
ref
100 ohm
C49
10 nF, 100 V
100 nF, 400 V
C52
Tail resistors all 600 mW metal film
U28C
U30C
U29C
F1
F2
C44
C45
10 nF, 100 V
NXP 74AHCT74D,112
U27B
sdin
clockn5
C21
C22
R90
R91
R92
R89
D2
BAS70
C60
100 nF
C25
TST
P6

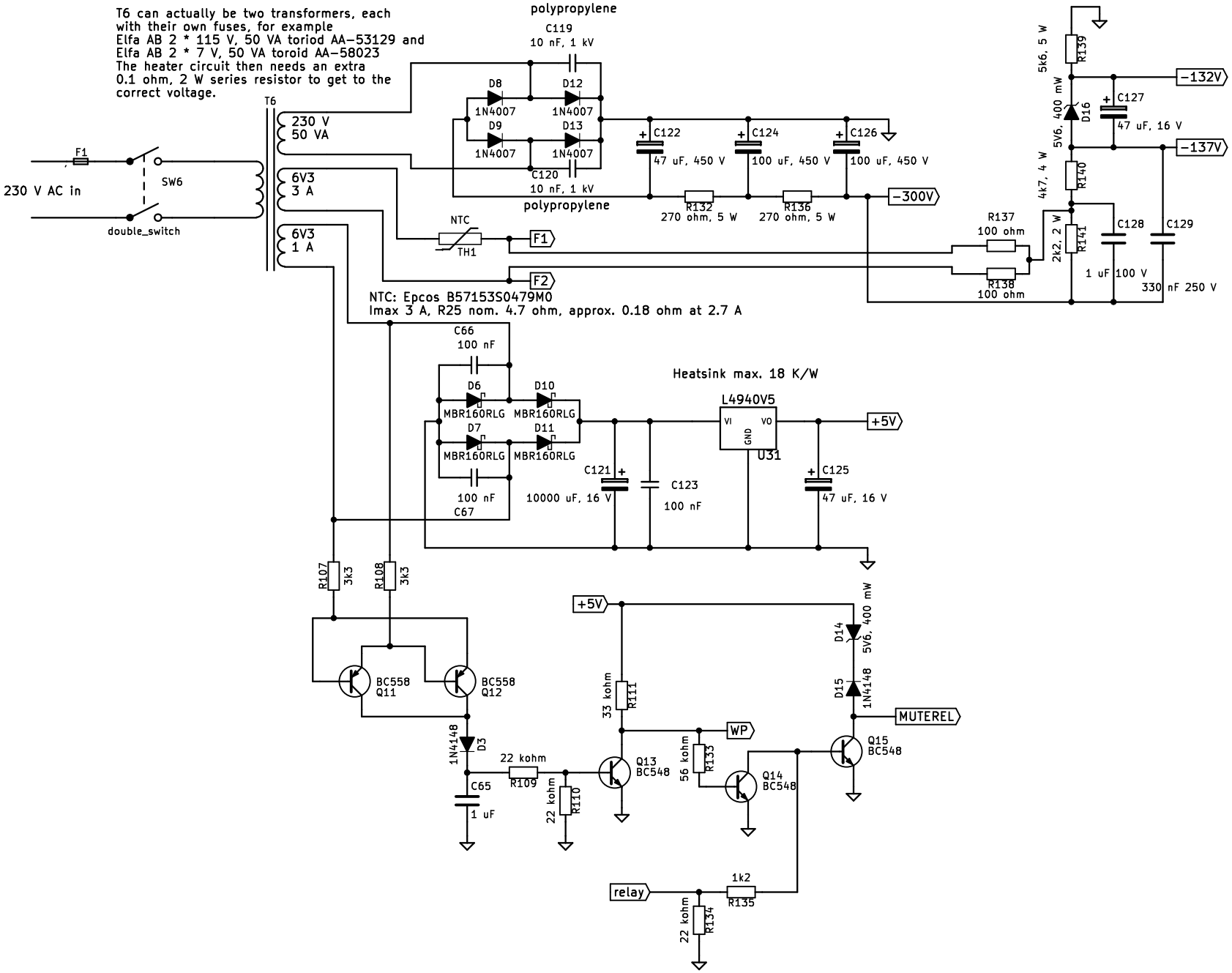
T6 can actually be two transformers, each
with their own fuses, for example
Elfa AB 2 * 115 V, 50 VA toriod AA-53129 and
Elfa AB 2 * 7 V, 50 VA toroid AA-58023
The heater circuit then needs an extra
0.1 ohm, 2 W series resistor to get to the
correct voltage.
230 V AC in
F1
SW6
double_switch
T6
230 V
50 VA
6V3
3 A
6V3
1 A
polypropylene
C119
10 nF, 1 kV
D8
1N4007
D12
1N4007
D9
1N4007
D13
1N4007
C120
10 nF, 1 kV
polypropylene
C122
47 uF, 450 V
C124
100 uF, 450 V
C126
100 uF, 450 V
R132
270 ohm, 5 W
R136
270 ohm, 5 W
-300V
NTC
TH1
F1
F2
NTC: Epcos B57153S0479M0
Imax 3 A, R25 nom. 4.7 ohm, approx. 0.18 ohm at 2.7 A
R137
100 ohm
R138
100 ohm
R139
5k6, 5 W
D16
5V6, 400 mW
R140
4k7, 4 W
R141
2k2, 2 W
C127
47 uF, 16 V
-132V
-137V
C128
1 uF 100 V
C129
330 nF 250 V
C66
100 nF
D6
MBR160RLG
D10
MBR160RLG
D7
MBR160RLG
D11
MBR160RLG
100 nF
C67
Heatsink max. 18 K/W
L4940V5
VI
VO
GND
U31
+5V
C121
10000 uF, 16 V
C123
100 nF
C125
47 uF, 16 V
R107
3k3
R108
3k3
BC558
Q11
BC558
Q12
1N4148
D3
C65
1 uF
22 kohm
R109
22 kohm
R110
+5V
33 kohm
R111
Q13
BC548
WP
56 kohm
R133
Q14
BC548
D14
5V6, 400 mW
D15
1N4148
MUTEREL
Q15
BC548
relay
1k2
R135
22 kohm
R134